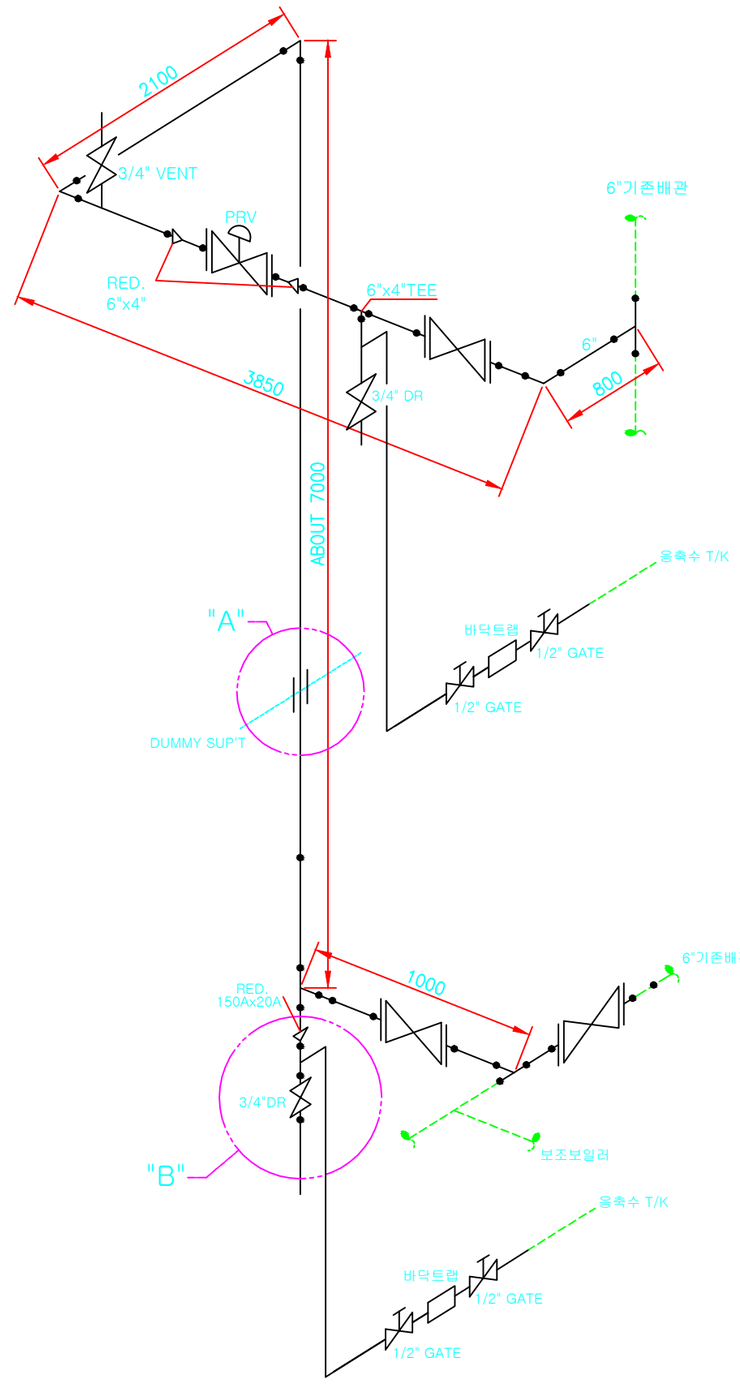
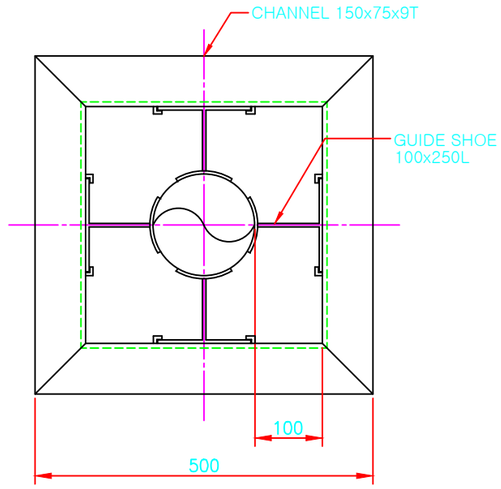
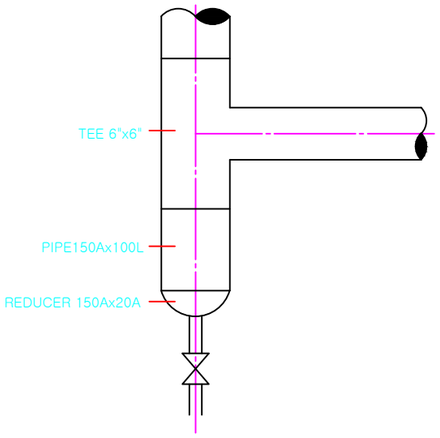




DETAIL"A"



DETAIL"B"

BILL OF MATERIAL

NO.	CODE	Q'TY	DESCRIPTION
1		6M	3/4" PIPE A53 ERW SCH40
2		18M	6" PIPE A53 ERW SCH40
3		18M	1/2" PIPE A53 ERW SCH40
4		3EA	6" ELBOW ERW SCH40
5		5EA	3/4" ELBOW ERW SCH40
6		10EA	1/2" ELBOW ERW SCH40
7		3EA	6" TEE ERW SCH40
8		1EA	6"x4" TEE ERW SCH40
9		1EA	6" CAP ERW SCH40
10		1EA	4" CAP ERW SCH40
11		4EA	6" FLANGE A105 150# SORF
12		2EA	4" FLANGE A105 150# SORF
13		4EA	1/2" FLANGE A105 150# SORF
14		4EA	6" GASKET METAL 내/외륜
15		2EA	4" GASKET METAL 내/외륜
16		4EA	1/2" GASKET METAL 내/외륜
17		3EA	3/4" SOCKOLET A105 SW
18		3EA	3/4" GATE VALVE A105 SW
19		4EA	1/2" GATE VALVE A105 SW
20		2EA	3/4" NIPPLE A105 100L
21		32EA	BOLT/NUT STUD B7 3/4"x130L
22		16EA	BOLT/NUT STUD B7 5/8"x120L
23		3EA	GATE VALVE 6" 150#
24		1EA	PRV 4" 150#
25		7EA	SUPPORT: SHOE
26		1M	SUPPORT: DUMMY 4" PIPE
27		4EA	SUPPORT: GUIDE
28		2M	SUPPORT: CHANNEL 150x75x9T
29		-	SUPPORT: 광명단(CHANNEL & PIPE)

HVAC 열원공급 개선도(ISO)

| | | |